SKILLING HELLE CHRISTIANSEN ROBERTSON — Structural & Civil Engineers

PROJECT: LIBERTY STREET BRIDGE — WORLD TRADE CENTER - MODIFICATION

TITLE: NORTH SUPPORT

DATE: 6-29-73

REVISIONS

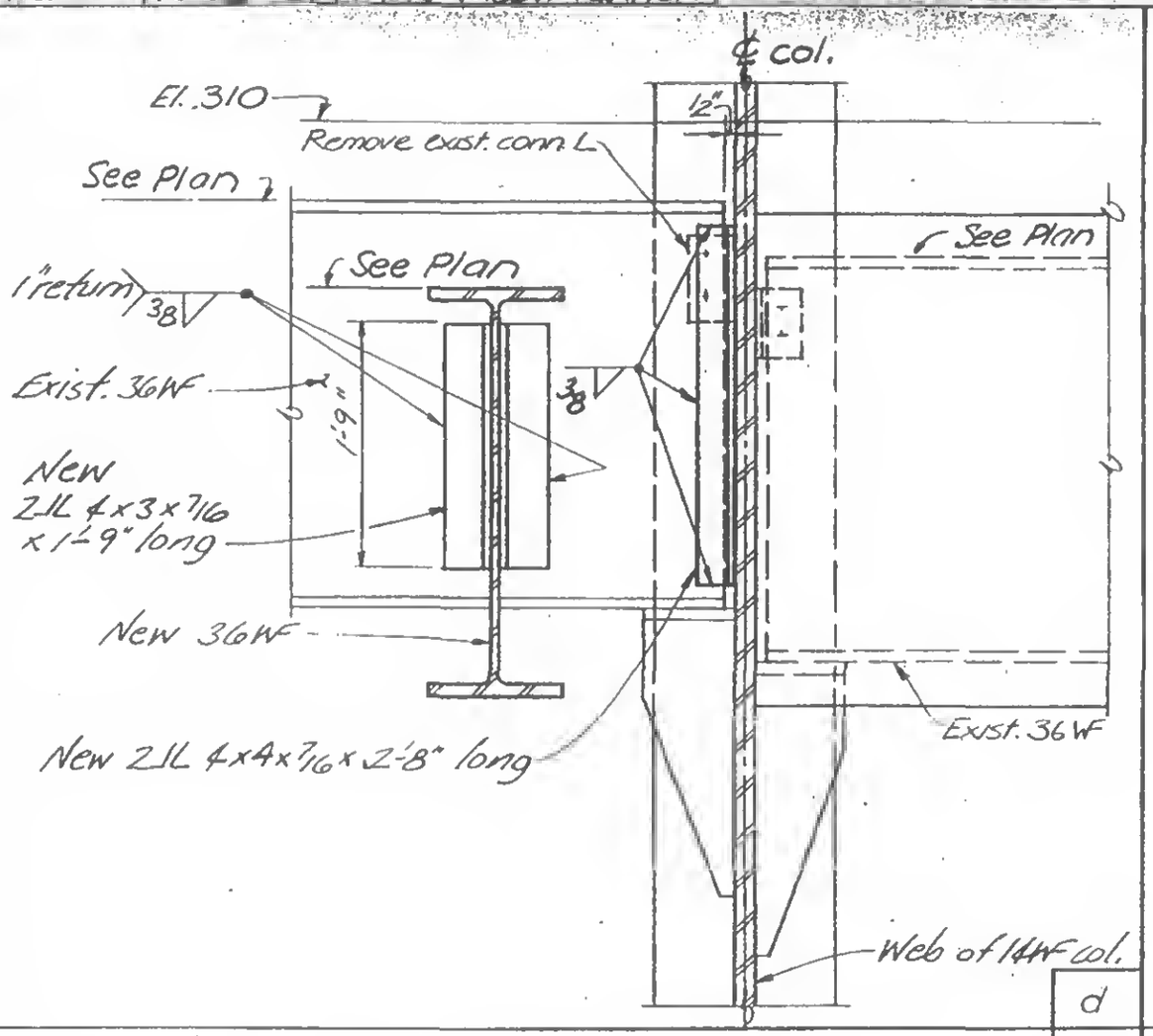

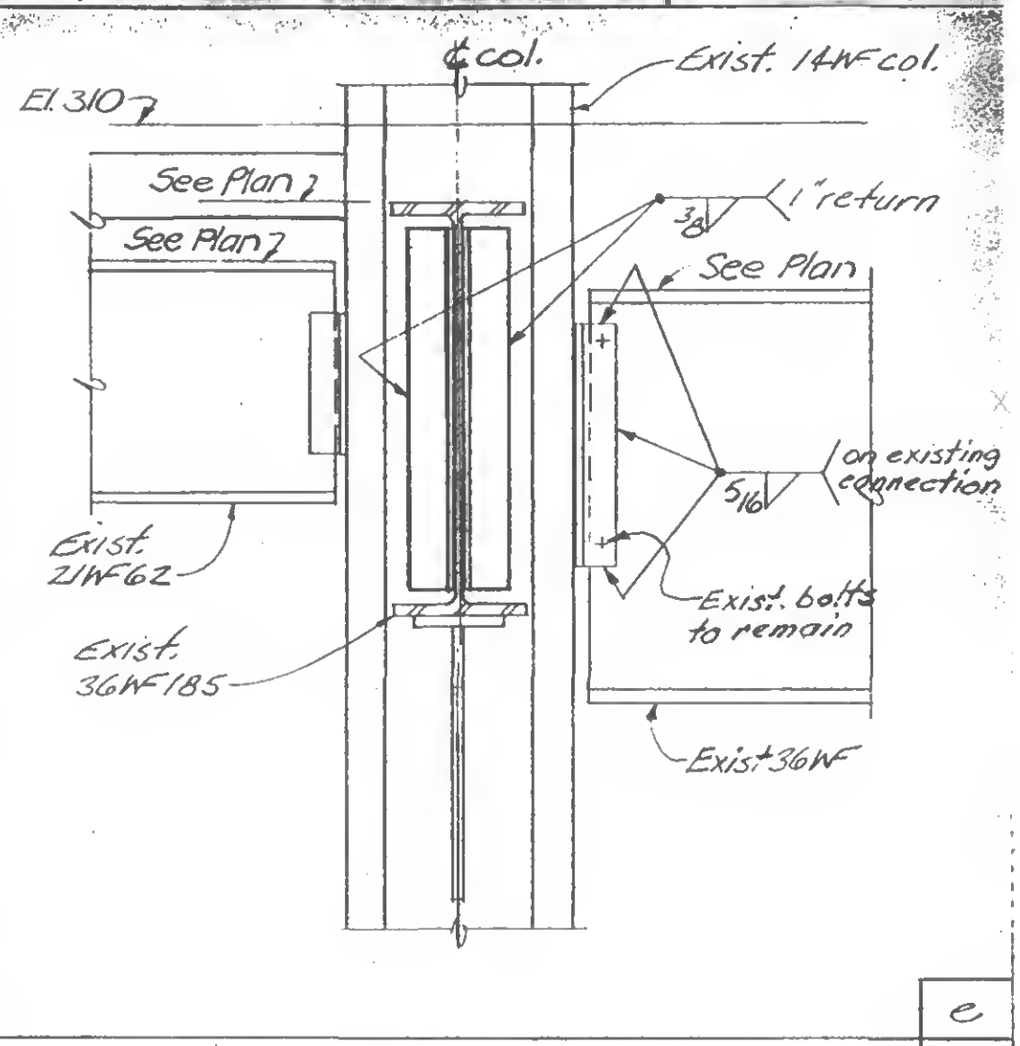

d

f

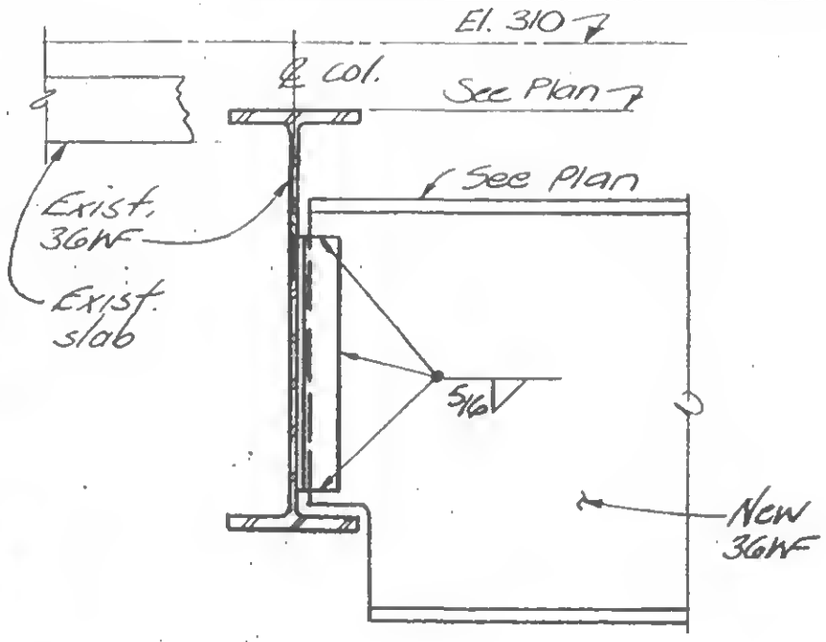

e

D

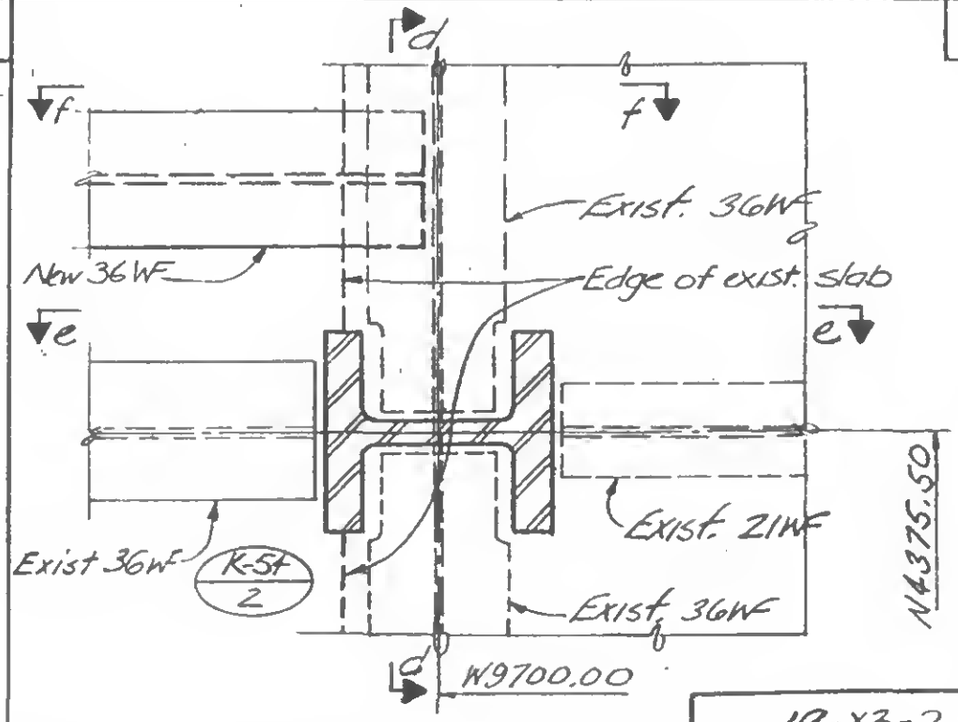

LICENSED PROFESSIONAL ENGINEER — LESLIE E. ROBERTSON — No. 34960 — UNIVERSITY OF THE STATE OF NEW YORK

DESIGNED: DS

DRAWN: PO

REVIEWED: HR WCB

19-X3-2.2