SKILLING HELLE CHRISTIANSEN ROBERTSON Structural & Civil Engineers

PROJECT: LIBERTY STREET BRIDGE WORLD TRADE CENTER MODIFICATION | TITLE: CENTER PIER SUPPORT | DATE: 6-29-73

REVISIONS

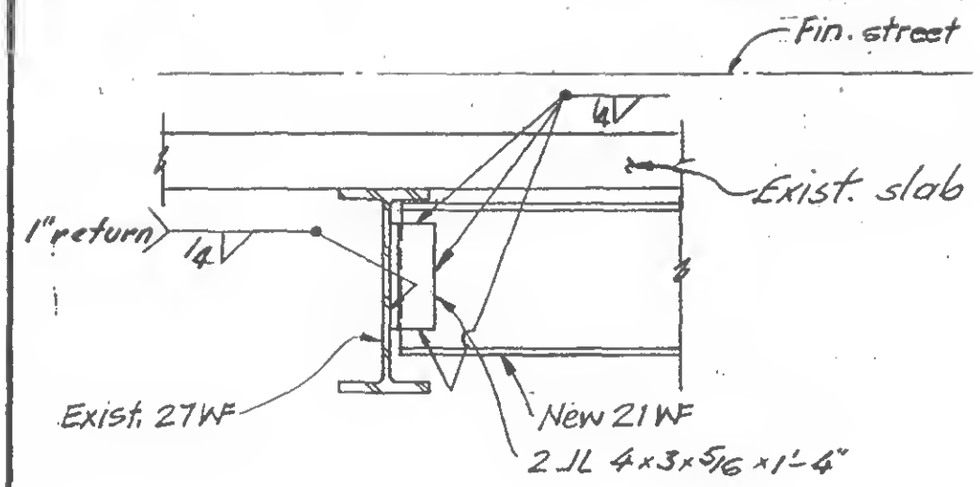

L

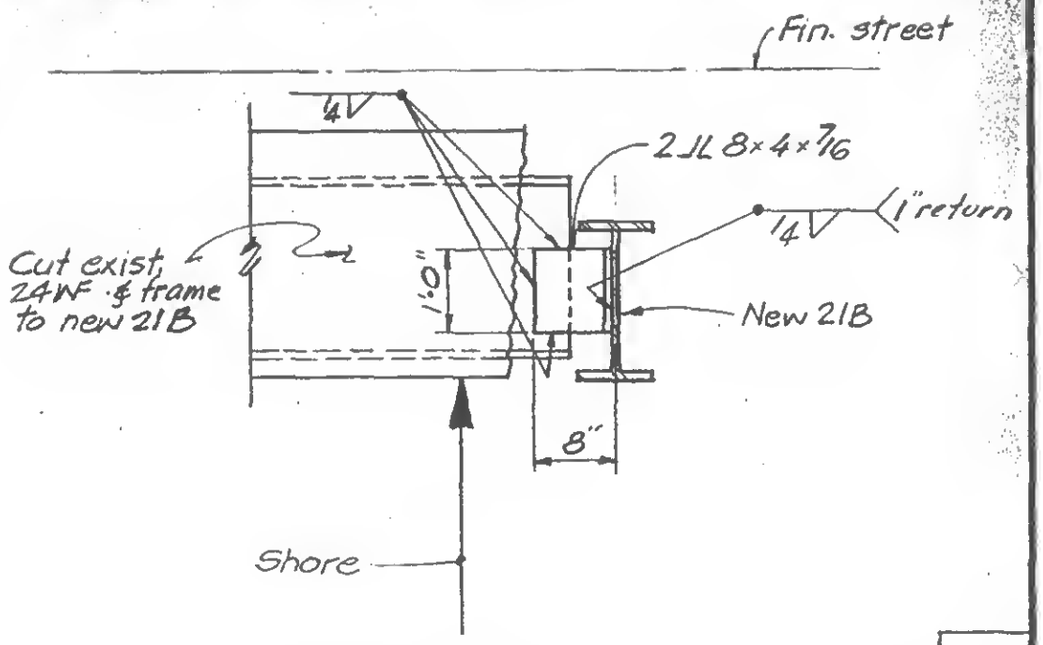

M

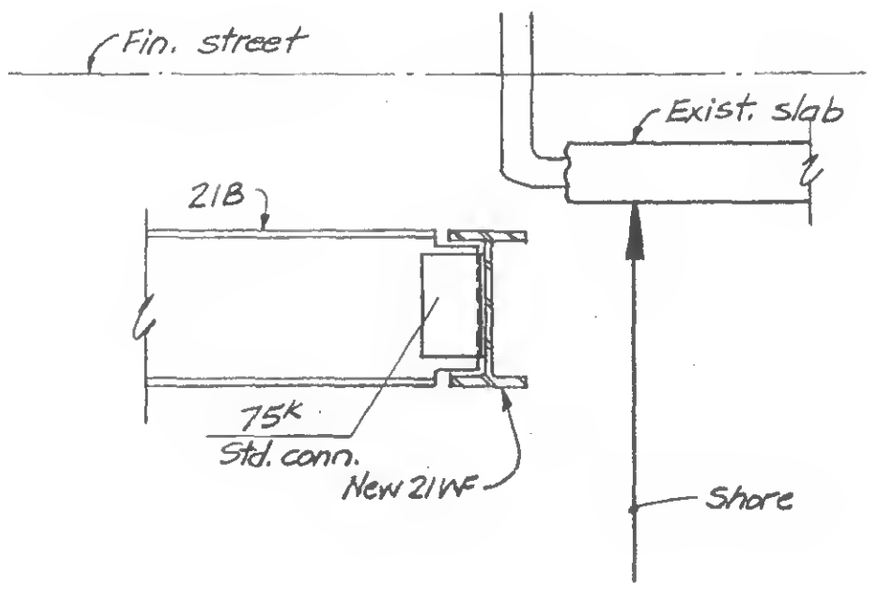

N

LICENSED PROFESSIONAL ENGINEER
LESLIE E. ROBERTSON
No. 34360
UNIVERSITY OF THE STATE OF NEW YORK

DESIGNED: WAB

DRAWN: [signature]

REVIEWED: HR, WAB

19-X3-3.6