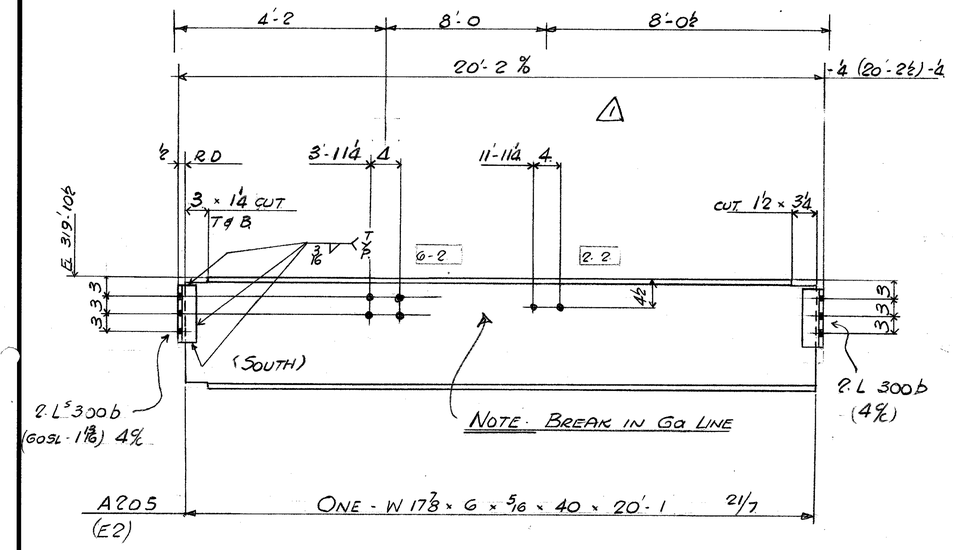

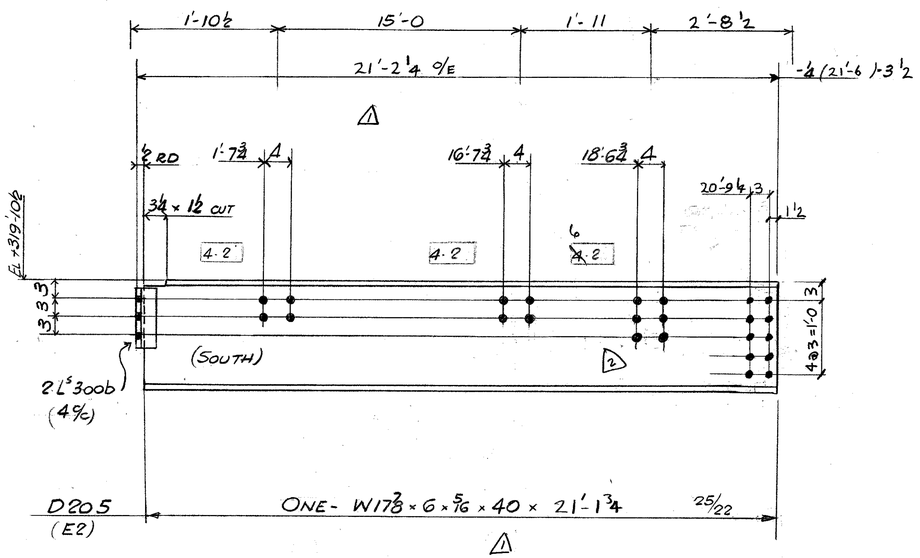

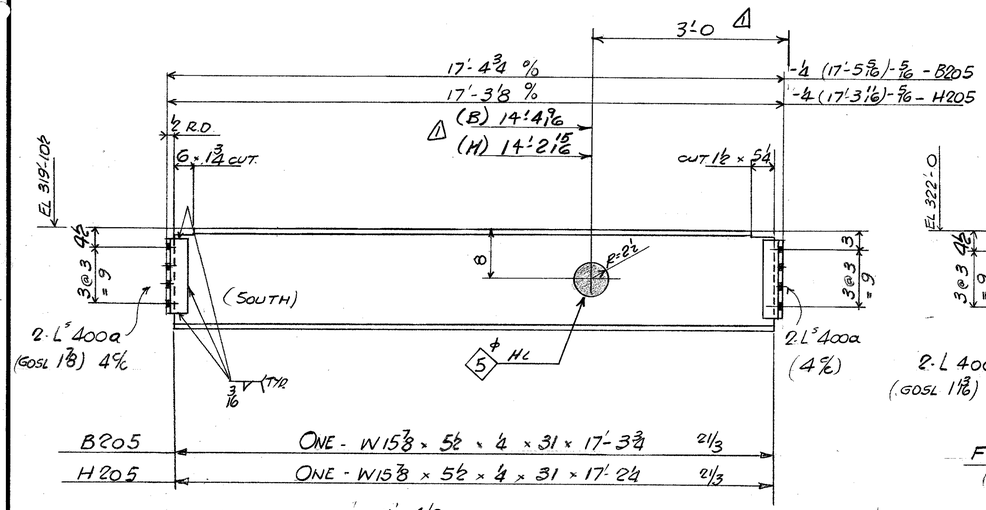

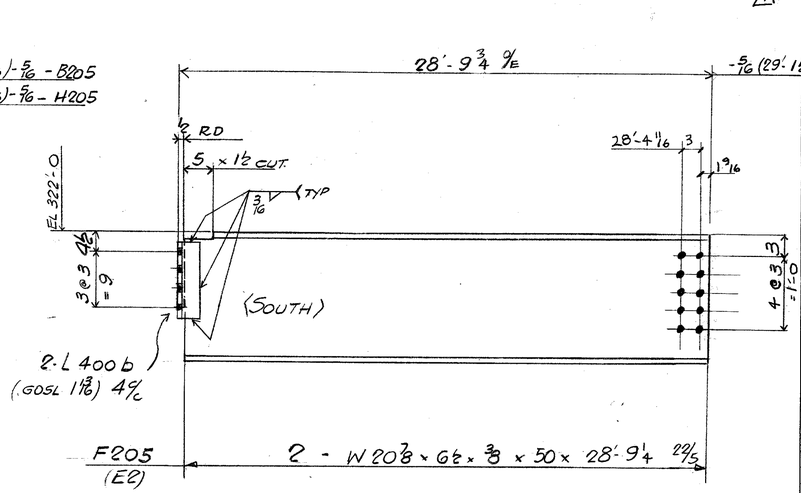

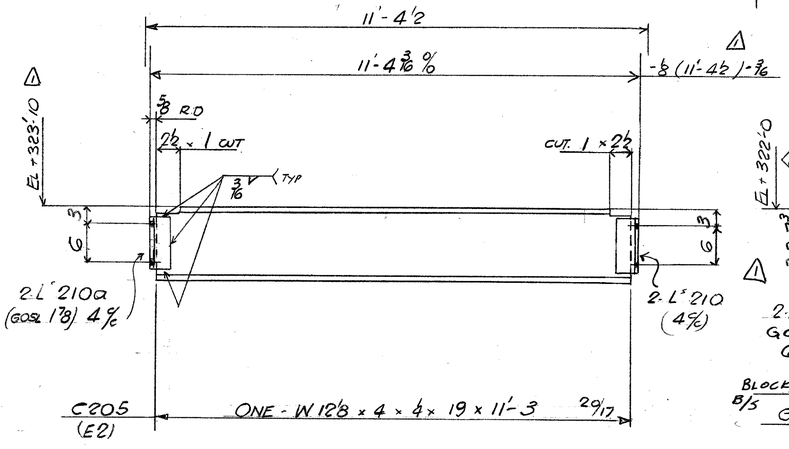

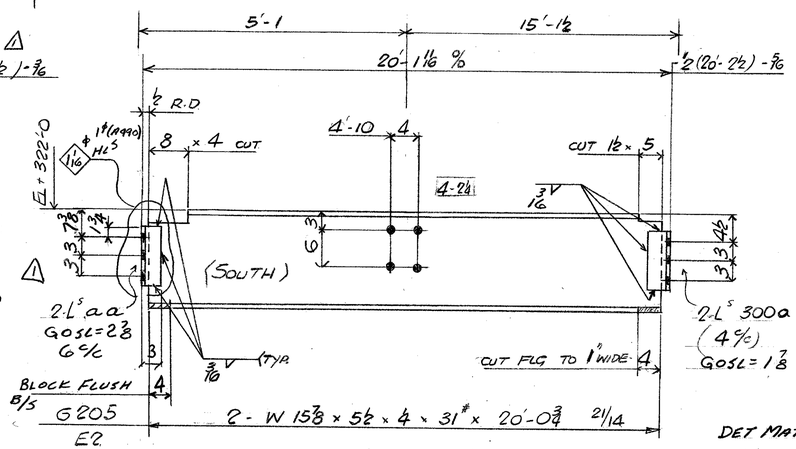

FIELD BOLTS
8 - 7/8ø A325 × 2¼
22 7/8ø A325 × 2
4

DET MAT' G40.21-44W
NO PAINT
REF DIAG - E2
WELD E70XX

NO PAINT WITHIN 3"
OF ALL OPEN HOLES

BILL OF MATERIAL

LINE	COST CODE	COMMX SHIP DIVN.	PIECE MARKS MAIN MAT'L.	PIECE MARKS DETAIL MAT'L.	NO. OF PIECES	MATERIAL DESCRIPTION PL	WIDTH Inch	WIDTH 16th	X PLATE ONLY	THK. In.	THK. 16th	GRADE CODE	DSOR	FINISHED LENGTH Feet	FINISHED LENGTH In.	FINISHED LENGTH 16th	PAGE	LINE	REMARKS
01					F001														
02																			
03				300B	4	L	3	× 3 ×	5/16			44W		0	8	8			
04																			
05					1	IF		3/16						4	6	0			
06																			
07	000A	A205			1	W	18	× 40				A572-GR50		20	1	0	21	7	
08																			
09					F007														
10				400A	8	L	3	× 3 ×	5/16			44W		0	11	8			
11																			
12					1	IF		3/16						11	0	0			
13																			
14	0009	B205			1	W	16	× 31				A572-GR50		17	3	12	21	3	
15	0009	H205			1	"		"				"		17	2	4	21	3	
16					F001														
17																			
18				210A	4	L	3	× 3 ×	5/16			44W		0	8	8			
19																			
20					1	IF		3/16						4	6	0			
21																			
22	0009	C205			1	W	12	× 19				A572-GR50		11	3	0	20	17	Δ1
23																			
24																			
25																			
26			TOTAL						TOTAL										1 OF 2
01					F001														
02																			
03				300B	2	L	3	× 3 ×	5/16			44W		0	8	8			
04																			
05					1	IF		3/16						4	6	0			
06																			
07	0002	D205			1	W	18	× 40				A572 GR50		21	1	12	25	22	
08																			
09					F002														
10																			
11				400B	4	L	3	× 3 ×	5/16			44W		0	11	8			
12																			
13					1	IF		3/16						11	0	0			
14	0002	F205			1	W	21	× 50				A572 GR50		28	9	4	22	5	
15	0001	F205			1	W	21	× 50				A572-GR50		28	9	4	22	5	
16																			
17					F002														
18																			
19				300A	4	L	3	× 3 ×	5/16			44W		0	8	8			
20				BR	4	L	4	× 3 ×	5/16			44W		0	9	8			
21					1	IF		3/16						9	0	0			
22																			
23	0004	G205			1	W	16	× 31				A572-GR50		20	0	12	21	14	
24	0003	G205			1	W	16	× 31				A572-GR50		20	0	12	21	19	mar 5/85 R Δ1 11/3/85
25																			
26			TOTAL		54				TOTAL					225					2 OF 2

REV				
1	DATE FEB 5/86	APP'D BY WAD	SPEC. A572 GR50 4/M	
Δ2	DATE MAR 5/85	BY FR	HOLES 18 ø 4/M	
3	DATE	BY -	FINISH	

FRANKEL STEEL LIMITED
220 ATTWELL DRIVE, UNIT 1, REXDALE, ONTARIO M9W 5B2

MADE	DATE	SQUAD	PROJECT	CONTRACT	DWG.No.
27 W.M	DEC/84	F.R	7 WORLD TRADE CENTER (47 STOREY)	84-15	205
CHK'D. 28 WAD	DATE DEC/84		DETAIL: 2ND FL. BEAMS		