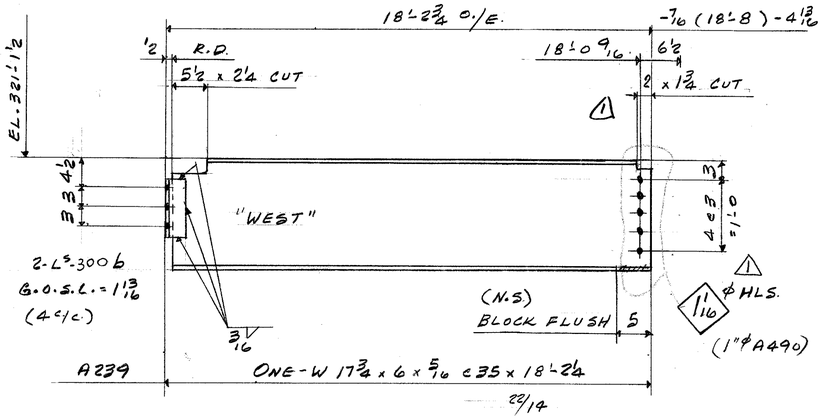

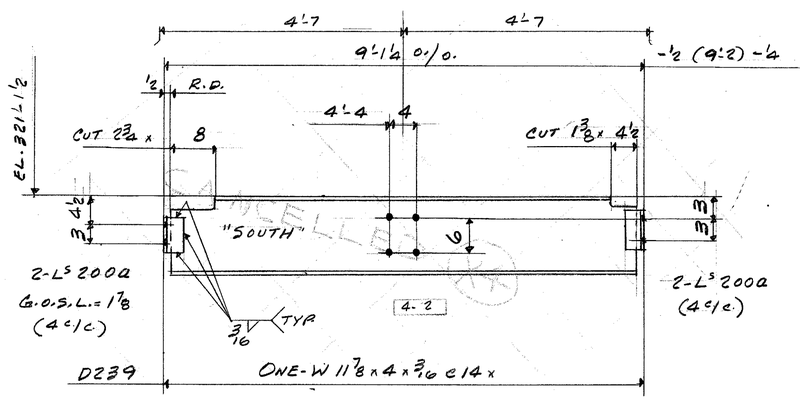

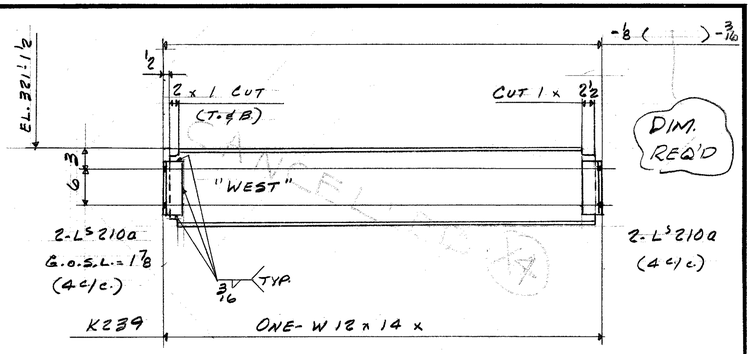

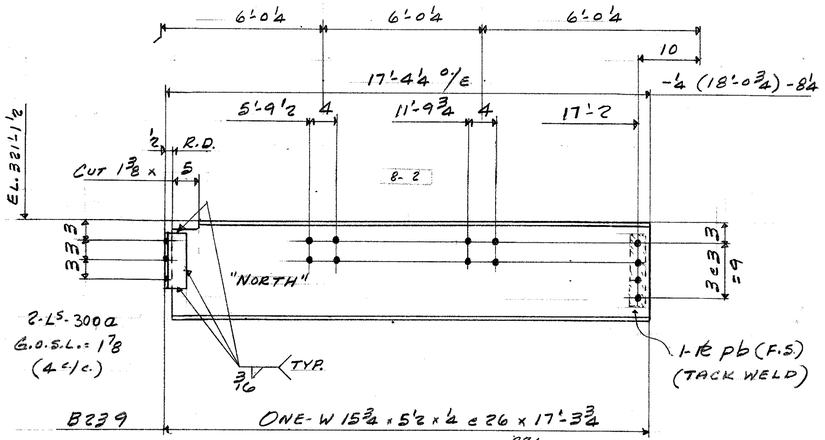

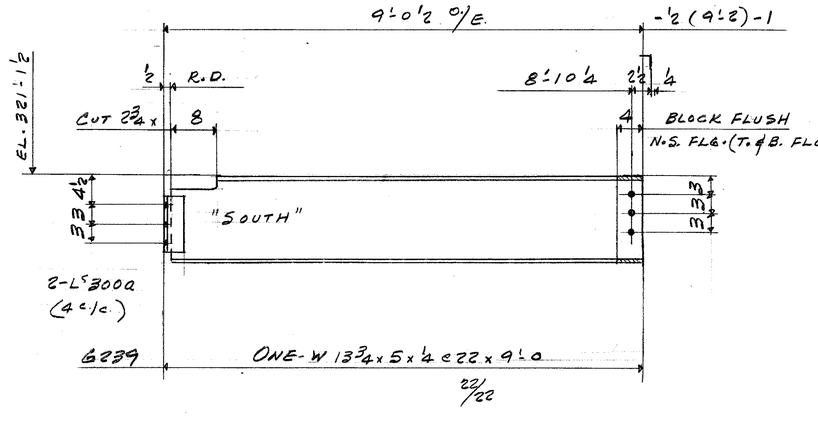

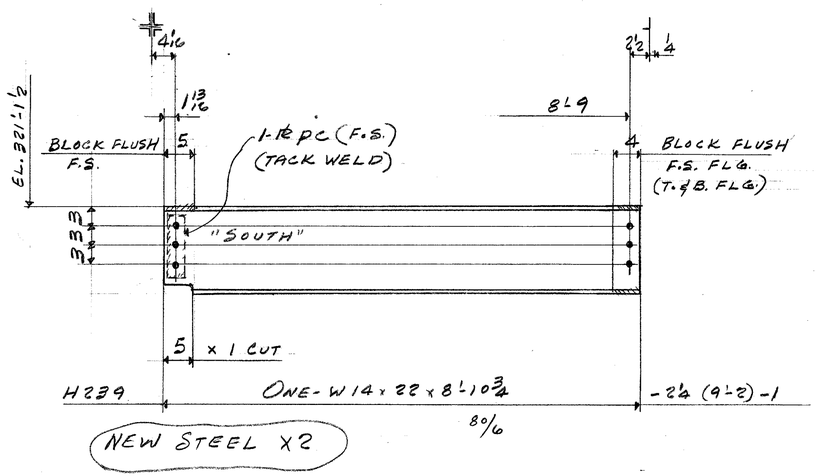

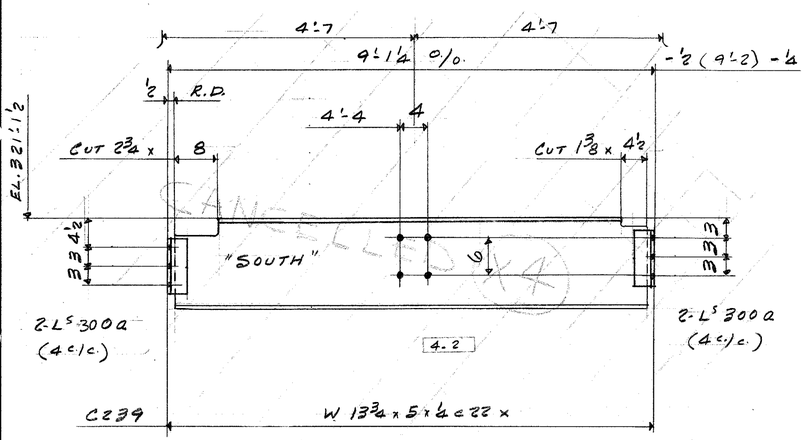

FIELD BOLTS
8-7/8 ℄ A325 x 2

DET MAT^L G40.21-44W
WELD: E70XX
NO PAINT
REF: E2

BILL OF MATERIAL

LINE	COOSDE	COMMX SHIP DIVN.	PIECE MARKS MAIN MAT'L.	PIECE MARKS DETAIL MAT'L.	NO. OF PIECES	MATERIAL DESCRIPTION PL	WIDTH Inch	WIDTH 16th	X PLATE ONLY	THK. In.	THK. 16th	GRADE CODE	DSOR	FINISHED LENGTH Feet	FINISHED LENGTH In.	FINISHED LENGTH 16th	PAGE	LINE	REMARKS
01					F.O.01														
02																			
03				300B	2	L	3	3x3x5/16				44W		0	8	8			
04																			
05					1	IF	3	1/16							2	3 0			
06																			
07	0.01	2A239			1	W	16x35					A572GR50		18	2	4	22	14	
08																			
09					F.O.01														
10																			
11				PB	1	PI	3	0x		0	5	44W		1	0	0			
12																			
13				300A	2	L	3x3x5/16					44W		0	8	8			
14					1	IF	3/16								2	3 0			
15																			
16																			
17	0.01	2B239			1	W	16x26					A572GR50		17	3	12	22	17	
18																			
19																			
20																			
21																			
22																			
23																			
24																			
25																			
26	TOTAL				TOTAL												1	OF 2	
01																			
02																			
03																			
04																			
05																			
06																			
07																			
08																			
09					F.O.01														
10				300A	2	L	3x3x5/16					44W		0	8	8			
11																			
12					1	IF	3/16								2	3 0			
13																			
14	0.01	2G239			1	W	14x22					A572GR50		9	0	0	2222		
15					F.O.01														
16			P.C.		1	PI	3	0x		0	9	44W		0	9	0			
17	0.01	2H239			1	W	14x22					A572GR50		8	10	12	80	6	
18																			
19																			
20																			
21																			
22																			
23																			
24																			
25																			
26	TOTAL	19			TOTAL	59											2	OF 2	FEB/26/85

REV.		DATE	BY
	1	FEB 14	WAD
	2	DATE	BY
	3	DATE	BY

SPEC. A572 GR50
HOLES 1P & U-N.
FINISH

FRANKEL STEEL LIMITED
220 ATTWELL DRIVE, UNIT 1, REXDALE, ONTARIO M9W 5B2

MADE 27	DATE	SQUAD
JS	DEC/84	F.R.
CHK'D. 28 WAD	DATE JAN/85	

PROJECT: 7 WORLD TRADE CENTER
DETAIL: 2ND FLOOR BEAMS

CONTRACT 84-15
DWG.No. 239