


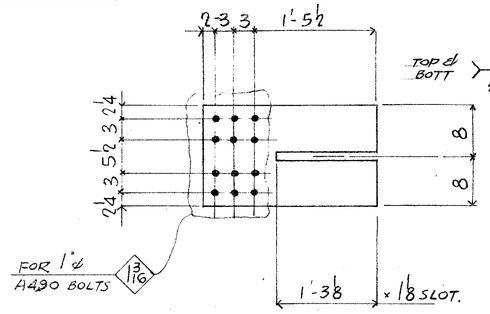


DETAIL OF PL - pb

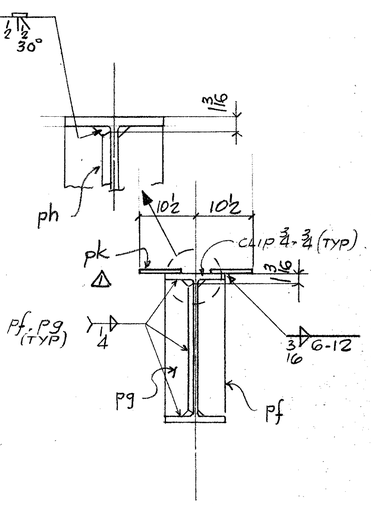


SECT~ A-A

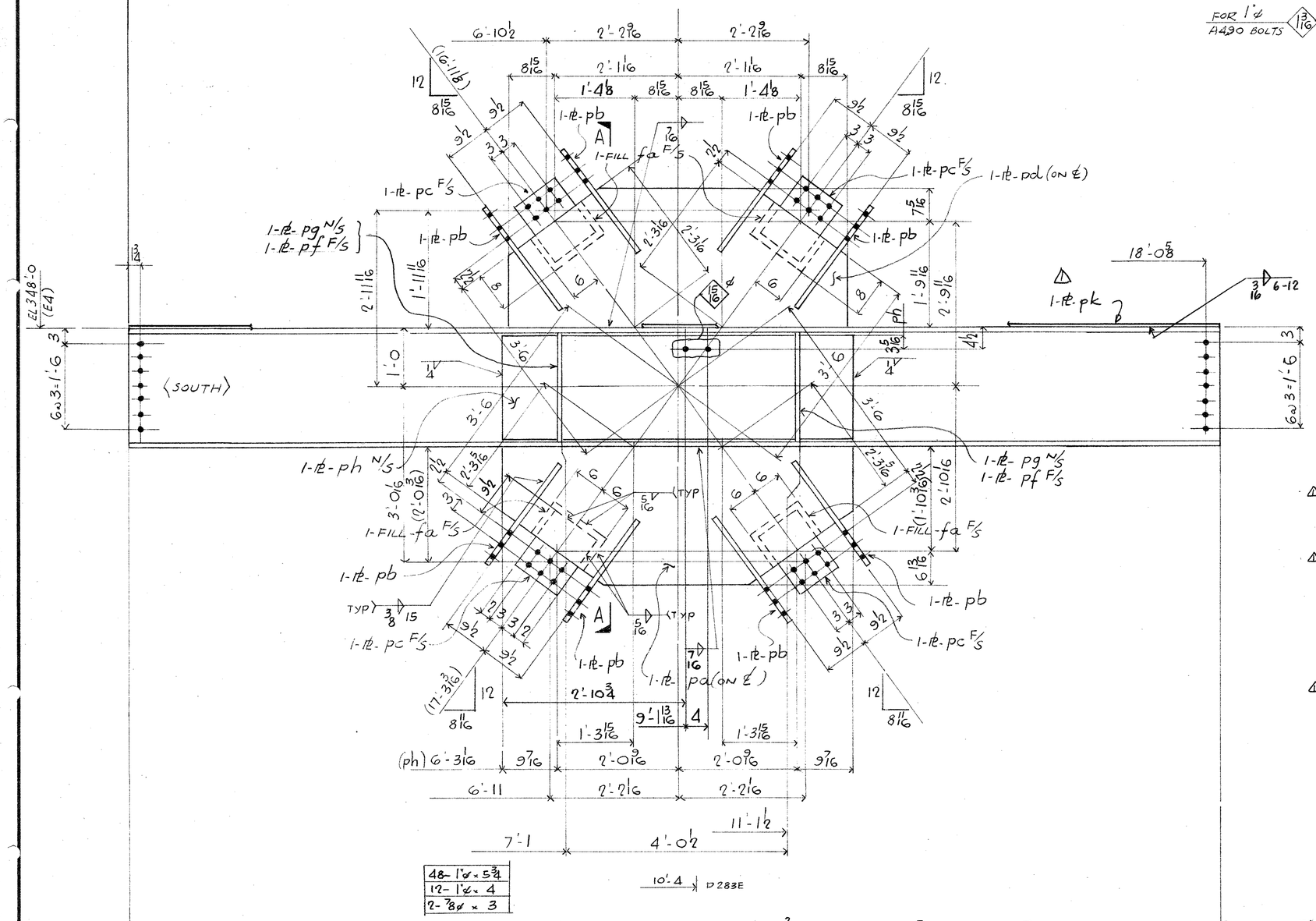


| 48- 1"ø x 5¾ |
|---|
| 12- 1"ø x 4 |
| 2- ⅞ø x 3 |

A437 ONE W 23 7/8 x 9 x 76 x 76 x 18'-2 3/8 P31/12 [MATL A36] (-1'-0 3/16 20'-9½ - 11 15/16)

〈DIV 7.〉

FIELD BOLTS
2- ⅞ø A325 x 3
24- 1"ø A490 x 4
96- 1"ø 1 x 5¾
120- 1"ø A325 WASHERS.

NOTES —
CONN MATL G40.21 GR 44W.
ELECTRODES E70XX.
NO PAINT
ALL 1"ø BOLTS TO HAVE 2 WASHERS.

REF DIAG E121.4.

## BILL OF MATERIAL

| LINE | CODE | COMM'X SHIP DIVN. | PIECE MARKS MAIN MAT'L. | PIECE MARKS DETAIL MAT'L. | NO. OF PIECES | MATERIAL DESCRIPTION PL | WIDTH Inch | WIDTH 16th | X PLATE ONLY | THK. In. | THK. 16th | GRADE CODE | DOOR | FINISHED LENGTH Feet | FINISHED LENGTH In. | FINISHED LENGTH 16th | PAGE | LINE | REMARKS |
|---|---|---|---|---|---|---|---|---|---|---|---|---|---|---|---|---|---|---|---|
| 01 | | | | F001 | | | | | | | | | | | | | | | |
| 02 | | | | | | | | | | | | | | | | | | | |
| 03 | | | | | | | | | | | | | | | | | | | |
| 04 | | | | PA | 1 | PL | 29 | 0 | X | 1 | 0 | 44W | | 5 | 8 | 0 | | | |
| 05 | | | | PB | 8 | | 16 | 0 | X | 0 | 12 | | | 2 | 1 | 8 | | | |
| 06 | | | | PC | 4 | | 10 | 0 | X | 0 | 8 | | | 1 | 2 | 8 | | | |
| 07 | | | | PD | 1 | | 29 | 0 | X | 1 | 0 | | | 5 | 8 | 0 | | | |
| 08 | | | | PE | 2 | | 4 | 4 | X | 0 | 8 | | | 1 | 10 | 8 | | | |
| 09 | | | | PG | 2 | | 3 | 12 | X | 0 | 8 | | | 1 | 10 | 8 | | | |
| 10 | | | | PH | 1 | | 21 | 8 | X | 0 | 8 | | | 5 | 8 | 0 | | | |
| 11 | | | | PK | 1 | | 21 | 0 | X | 0 | 4 | | | 18 | 2 | 6 | | | PREP 2S |
| 12 | | | | FA | 4 | | 8 | 0 | X | 0 | 8 | | | 1 | 0 | 0 | | | |
| 13 | | | | | | | | | | | | | | | | | | | |
| 14 | | | | | | | | | | | | | | | | | | | |
| 15 | | | | | | | | | | | | | | | | | | | |
| 16 | | | | | 1 | | | IF 31/16 | | | | | | 24 | 6 | 0 | | | |
| 17 | | | | | 1 | | | IF 1/4 | | | | | | 23 | 0 | 0 | | | |
| 18 | | | | | 1 | | | IF 5/16 | | | | | | 18 | 0 | 0 | | | |
| 19 | | | | | 1 | | | IF 7/16 | | | | | | 22 | 8 | 0 | | | |
| 20 | | | | | 1 | | | 4G [redacted] 5/8 | | | | | | 11 | 4 | 0 | | | |
| 21 | | | | | 1 | | | IF 3/8 | | | | | | 40 | 0 | 0 | | | |
| 22 | | | | | | | | | | | | | | | | | | | |
| 23 | | | | | | | | | | | | | | | | | | | |
| 24 | 0007 | A437 | | | 1 | W | 24 | 76 | | | | A36 | | 18 | 2 | 6 | 31 | 12 | |
| 25 | | | | | | | | | | | | | | | | | | | |
| 26 | | | TOTAL | 32 | | | TOTAL | | | | | | | 195 | | | | | (1 OF 1) |
| 01 | | | | | | | | | | | | | | | | | | | |
| 02 | | | | | | | | | | | | | | | | | | | |
| 03 | | | | | | | | | | | | | | | | | | | |
| 04 | | | | | | | | | | | | | | | | | | | |
| 05 | | | | | | | | | | | | | | | | | | | |
| 06 | | | | | | | | | | | | | | | | | | | |
| 07 | | | | | | | | | | | | | | | | | | | |
| 08 | | | | | | | | | | | | | | | | | | | |
| 09 | | | | | | | | | | | | | | | | | | | |
| 10 | | | | | | | | | | | | | | | | | | | |
| 11 | | | | | | | | | | | | | | | | | | | |
| 12 | | | | | | | | | | | | | | | | | | | |
| 13 | | | | | | | | | | | | | | | | | | | |
| 14 | | | | | | | | | | | | | | | | | | | |
| 15 | | | | | | | | | | | | | | | | | | | |
| 16 | | | | | | | | | | | | | | | | | | | |
| 17 | | | | | | | | | | | | | | | | | | | |
| 18 | | | | | | | | | | | | | | | | | | | |
| 19 | | | | | | | | | | | | | | | | | | | |
| 20 | | | | | | | | | | | | | | | | | | | |
| 21 | | | | | | | | | | | | | | | | | | | |
| 22 | | | | | | | | | | | | | | | | | | | |
| 23 | | | | | | | | | | | | | | | | | | | |
| 24 | | | | | | | | | | | | | | | | | | | |
| 25 | | | | | | | | | | | | | | | | | | | |
| 26 | | | TOTAL | | | | TOTAL | | | | | | | | | | | | |

MARCH 7/85 R
FEB 26/85

| R E V. | | | | |
|---|---|---|---|---|
| 1 | DATE 1 MAR '85 | BY PBG | SPEC. A36 U/N | |
| 2 | DATE | BY | HOLES 1/16ø U/N. | |
| 3 | DATE | BY | FINISH | |

MADE 27 ACS DATE FEB '85 SQUAD FR
CHK'D. 28 ME DATE FEB 85

**FRANKEL STEEL LIMITED**
220 ATTWELL DRIVE, UNIT 1, REXDALE, ONTARIO M9W 5B2

PROJECT: 7 WORLD TRADE CENTER
DETAIL: BRACED BEAM @ EL 348'-0

CONTRACT 84-15
DWG.No. 437