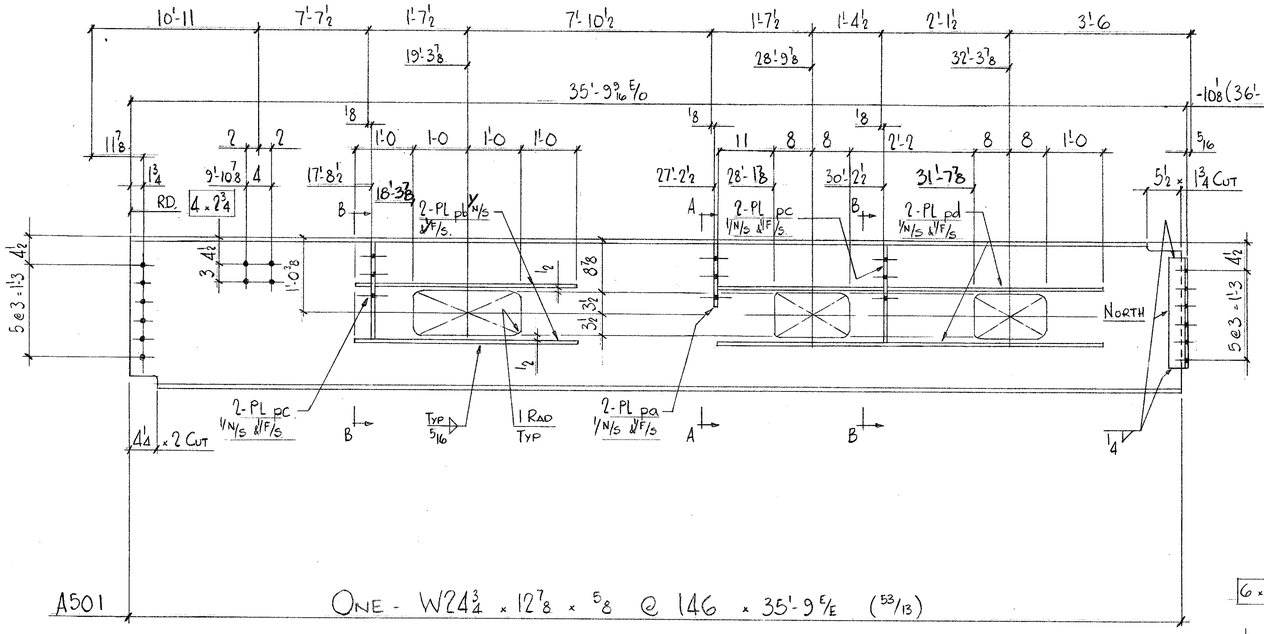

A501 ONE - W24¾ x 127⅞ x ⅝ @ 146 x 35'-9 E/E (53/13)

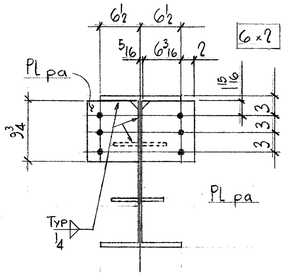

SECT^N A-A.

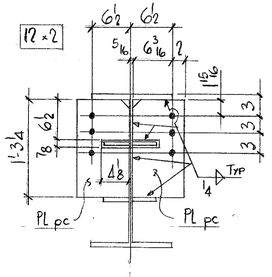

SECT^N B-B

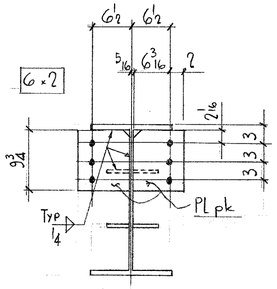

SECT^N D-D.

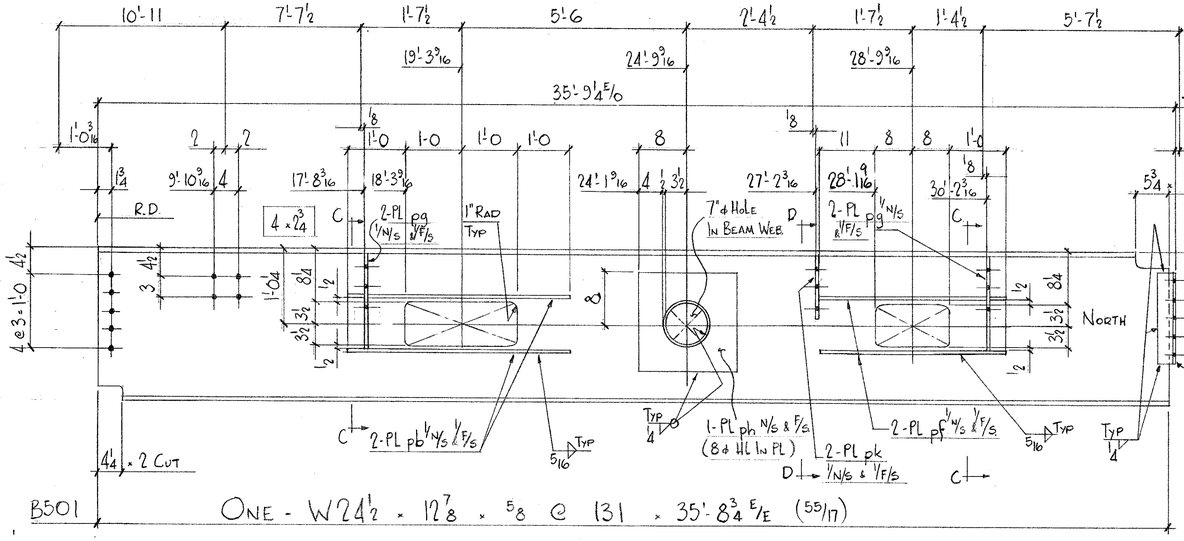

B501 ONE - W24½ x 127⅞ x ⅝ @ 131 x 35'-8 3/4 E/E (55/17)

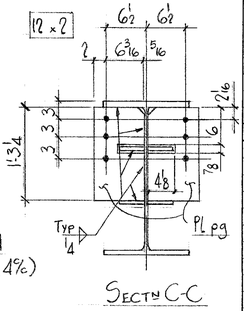

SECT^N C-C

WELD E70XX
NO PAINT
REF EG

DETAIL MAT^L G40.21.44W
FIELD BOLTS.
36 - ⅞ø x 2 (A325)
8 - ⅞ø x 2¾ L

BILL OF MATERIAL

LINE	CCOSDTE	COMMX SHIP DIVN.	PIECE MARKS MAIN MAT'L.	PIECE MARKS DETAIL MAT'L.	NO. OF PIECES	MATERIAL DESCRIPTION PL	WIDTH Inch	WIDTH 16th	X PLATE ONLY	THK. In.	THK. 16th	GRADE CODE	DSOR	FINISHED LENGTH Feet	FINISHED LENGTH In.	FINISHED LENGTH 16th	PAGE	LINE	REMARKS
01				Fool															
02				600D	2		L	3	x 3 x 5/16			44W		1	5	8			
03				PA	2	P1	8	3	x		0	6	2		0	3	12			
04				PB	4	P1	4	0	x		0	12	A572 GR50		4	1	0	0		
05				PC	2	P1	8	3	x		0	6	44W		1	3	4			
06				PD	4	P1	4	0	x		0	12	A572 GR50		6	9	0			
07																				
08					1		IF		1/4						35	0	0			
09					1		IF		5/16						86	0	0			
10																				
11	0101	A501			1		W	24	x 146			A572 GR50		35	9	0	55	13	
12																				
13				Fool																
14				500D	2		L	3	x 3 x 5/16			44W		1	2	8			
15				PB	4	P1	4	0	x		0	12	A572 GR50		4	0	0			
16				PF	4	P1	4	0	x		0	12	2		3	3	0			
17				PG	4	P1	8	3	x		0	6	44W		1	3	4			
18				PH	2	P1	16	0	x		0	8	A572 GR50		1	4	0			
19				PK	2	P1	8	3	x		0	6	44W		0	9	12			
20																				
21					1		IF		1/4						49	0	0			
22					1		IF		5/16						58	0	0			
23																				
24	0101	B501			1		W	24	x 131			A572 GR50		35	8	12	55	17	
25																				
26				TOTAL	40				TOTAL					310			1 OF 1		

REV.	DATE	BY
1		
2		
3		

SPEC. A572 GR50 U/N.
HOLES. 15/16 ø
FINISH

FRANKEL STEEL LIMITED
220 ATTWELL DRIVE, UNIT 1, REXDALE, ONTARIO M9W 5B2

MADE 27	FC	DATE FEB 85	SQUAD FR
CHK'D. 28	WD	DATE MAR/85	

PROJECT: 7 WORLD TRADE CENTER.
DETAIL: 6TH FLOOR BEAMS

CONTRACT 84-15
DWG.No. 501

Mar 19/85

IMPERIAL